HVSP-0R6-MDX

REV	ECN	DESCRIPTION	DATE	MODIFIED
A		FIRST RELEASE	2016.10.10	S.T

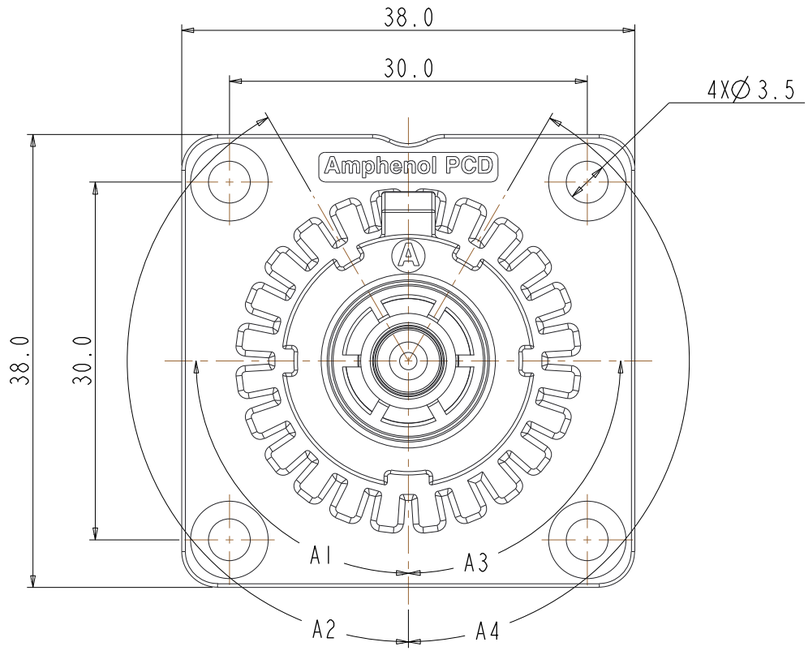

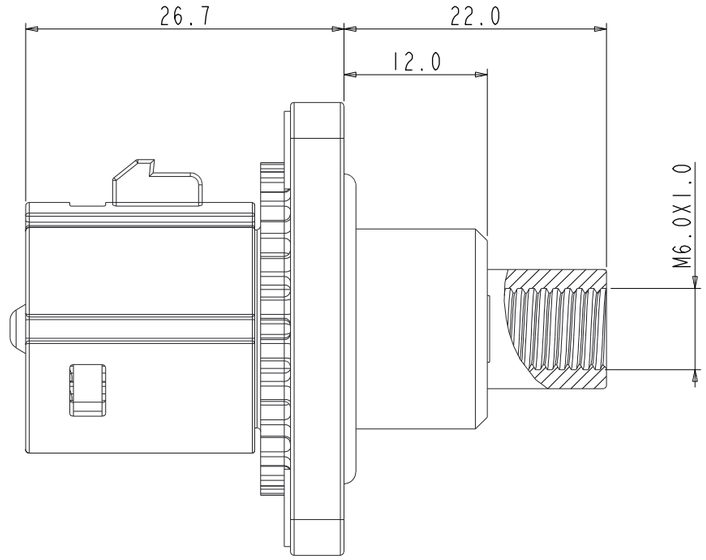

NOTE:
ABOUT THE * STAND FOR IN PART NUMBER HVSP-0R6-MD*
-THE * STAND FOR COLOR OF INSULATOR(SEE TABLE 1)

PART NO.	A1	A2	A3	A4
HVSP-0R6-MDA	90	150	90	150
HVSP-0R6-MDB	90	120	90	120
HVSP-0R6-MDC	120	150	120	150
HVSP-0R6-MDD	120	150	90	150
HVSP-0R6-MDE	90	150	120	150

TABLE 1

TECHNICAL DATA	
CURRENT RATE(25MM^2 CABLE)	UP TO 120A
UL RATING VOLTAGE (OVERVOLTAGE CATEGORY II POLLUTION DEGREE 2)	1000V DC
OPERATING TEMPERATURE	-40~125 C
DIELECTRIC WITHSTANDING VOLTAGE	3000V AC
INSULATION RESISTANCE	2000MΩ MIN. 25 C, NO CABLE
DURABILITY	200 CYCLES
SHIELDING	NO
WATERPRROF(MATED CONDITION)	IP 67
AMBIENT TEMPERATURE	-40~70 C
PROTECTION LEVEL	IP2XB

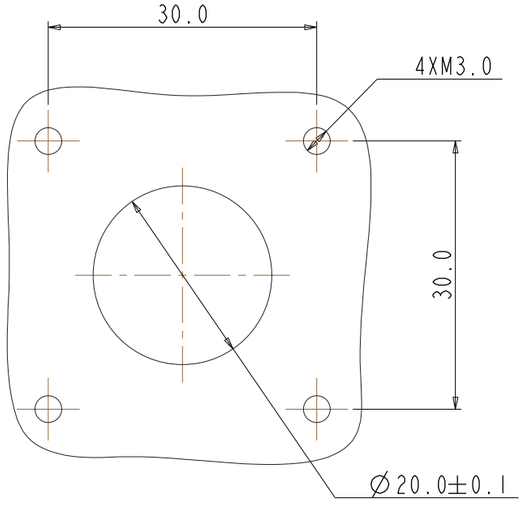

PANEL CUT-OUT REFERENCE

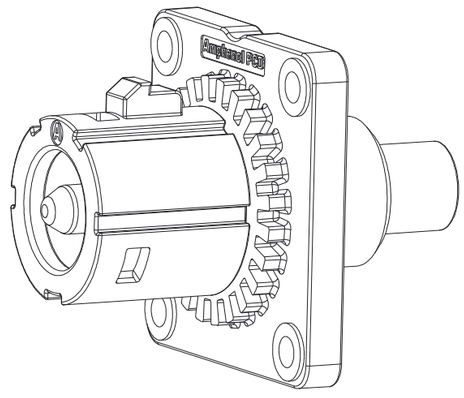

DIMENSIONS	TOLERANCES	PROJECTION	Amphenol Pcd Shenzhen	TITLE
ANSI Y14.5M UNITS: MM Pro/E FILE	.X ±0.1 .XX ±0.05 ANGLES ±0.5°		ENGR S.T 2015.11.20	HVSP-R6 RECEPTACLE
ORIGINAL NOT FOR CUSTOMER DISTRIBUTION	THIS DOCUMENT CONTAINS PROPRIETARY INFORMATION WHICH IS THE CONFIDENTIAL PROPERTY OF AMPHENOL PCD SHENZHEN		CHKD APPD	SIZE A3 · DWG NO. HVSP-0R6-MDX · REV A CODE: 58982 · SCALE: 2:1 · SHEET 1 OF 1

HVSP-0R6-MDX